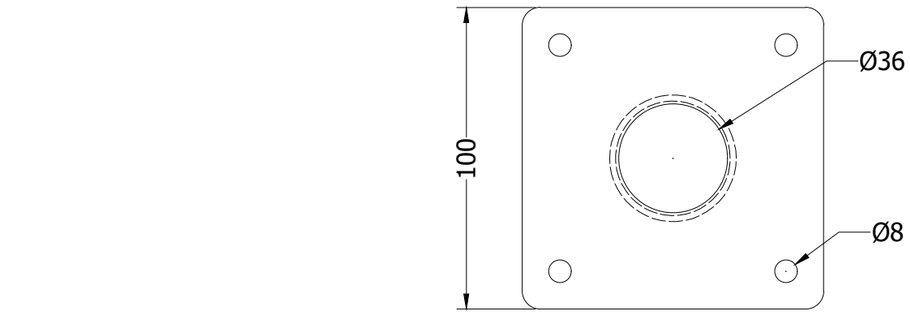

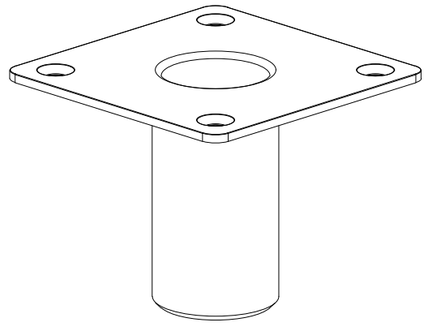

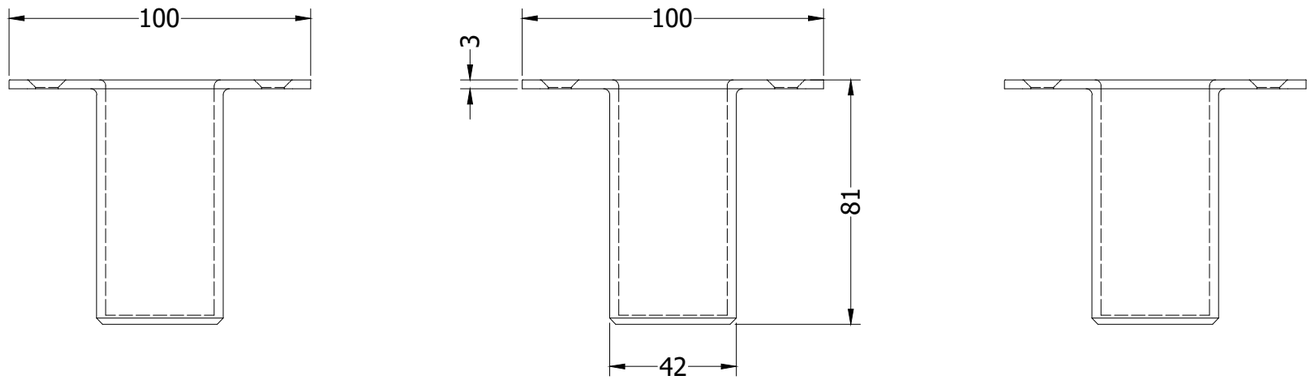

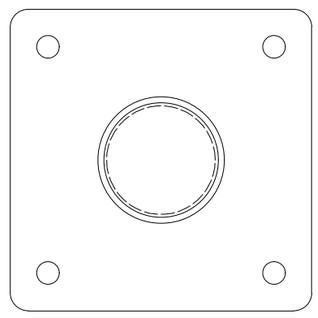

DRAWN Raj	01-08-2024	Karma Electric, Bengaluru, India
CHECKED	22-06-2026	TITLE
QA		Atomik - XN18.0.2 Top Hat
MFG	22-06-2026	
APPROVED	22-06-2026	SIZE D / DWG NO A XN18.0.2 Top Hat / REV 1.0
		SCALE 1 : 1 / SHEET 1 OF 1