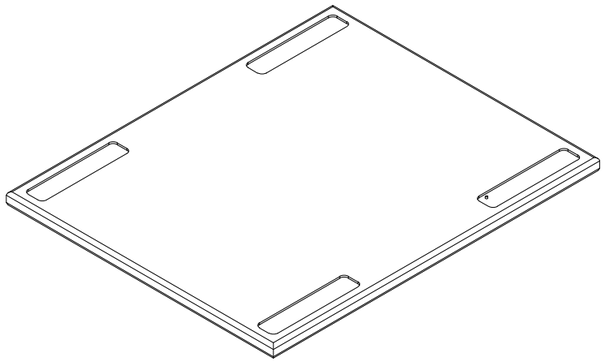



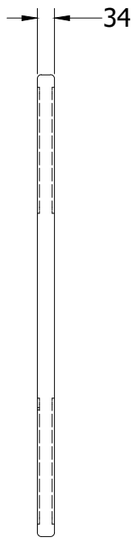

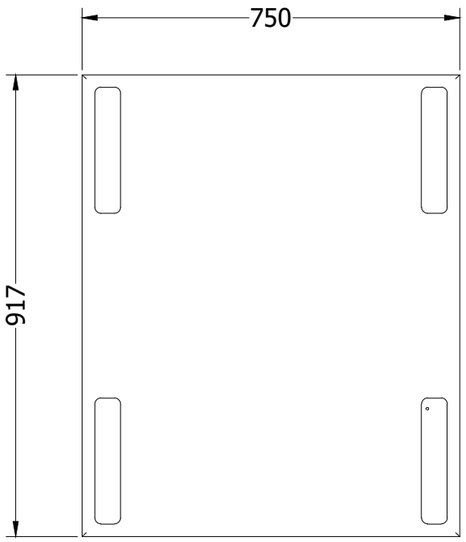



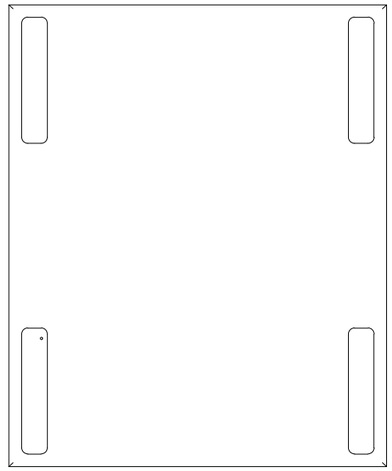



DRAWN Raj	25-09-2026	Karma Electric, Bengaluru, India	
CHECKED	25-09-2026		
QA		TITLE Atomik - Q21S - Adaptor Board 1.0	
MFG	25-09-2026		
APPROVED	25-09-2026	SIZE D / DWG NO Adaptor Board 1.0 / REV	
		SCALE 1 / 6 / SHEET 1 OF 1	